43 Integrated BLDC Motor

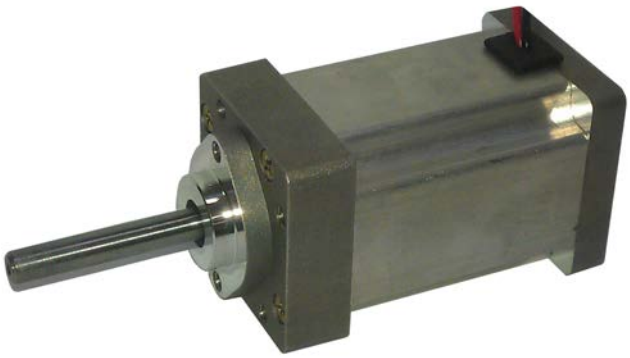

Features

- High Torque Low Noise
- Minimal Temperature Rise
- Small size Long life
- Integrated Motor Driver
- Hall Effect Sensors
- Inner Rotor
- Customizations Available

Application

- Pump / Compressor
- Industrial / Gear Motor
- Factory Automation

Dimensions

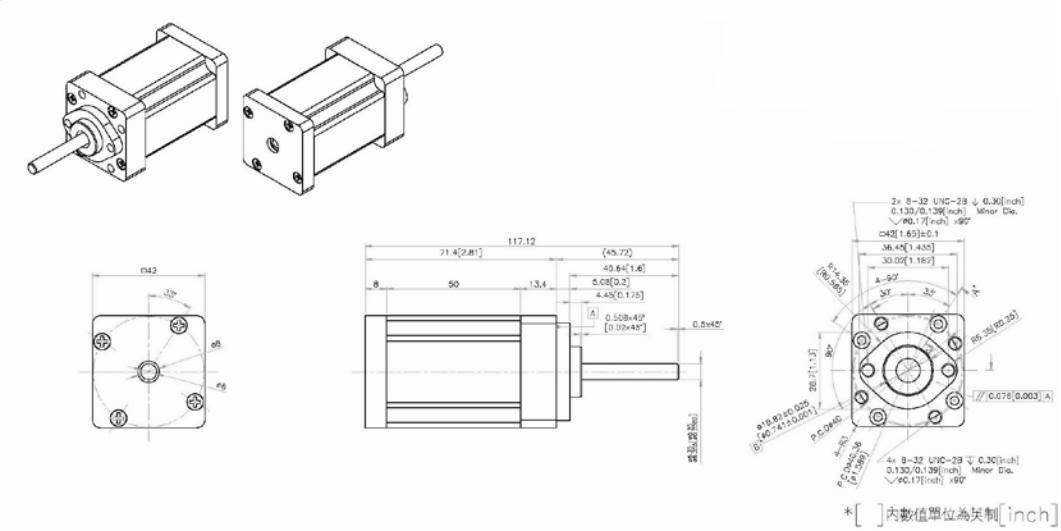

*【 】內數值單位為英制[inch]

【Above dimensions & below data are for your ref only. For detailed info or customized requirements, you are very welcome to inquire.】

Model No.	Rated Voltage [V]	No-Load Speed [r/min]	No-Load Current [A]	Rated Torque [g-cm]	Rated Speed [R.P.M.]	Rated Current [A]
ABL016	24	4400	0.35	500	3800	1
Model No.	**Torque Constant [g-cm/A]**	**Max-Efficiency [%]**	**Output [Watt]**	**Number of Pole/Pair**	**Dimensions [mm]**	**Weight [g]**
ABL016	500	80	15	4	42*42*72	370